SHI LING® 浙江世菱半导体有限公司
ZHEJIANG SHILING SEMICONDUCTOR CO.,LTD.

Specifcation of products

:

ZHEJIANG SHILING SEMICONDUCTOR CO.,LTD.

Module Type

◆Diode

Maximum Ratings

Symbol	Item	Conditions	Values	Units
I_D	Output Current(D.C.)	Tc=96℃ Three phase full wave	200	A
I_{FSM}	Surge forward current	t=10mS Tvj =45℃	1900	A
i^2t	Circuit Fusing Consideration		18050	A^2s
Visol	Isolation Breakdown Voltage(R.M.S)	a.c.50HZ;r.m.s.;1min	3000	V
Tvj	Operating Junction Temperature		-40 to +150	℃
Tstg	Storage Temperature		-40 to +125	℃
Mt	Mounting Torque	To terminals(M4)	2	

◆Thyristor

Maximum Ratings

Symbol	Item	Conditions	Values	Units
I_{TAV}	Average On-State Current	Tc=93℃, Single Phase half wave 180° conduction	200	A
I_{TSM}	Surge On-State Current	TVJ=45℃ t=10ms (50Hz), sine VR=0	1900	A
i^2t	Circuit Fusing Consideration		18050	A^2s
Visol	Isolation Breakdown Voltage(R.M.S)	a.c.50HZ;r.m.s.;1 min	3000	V
Tvj	Operating Junction Temperature		-40 to +125	℃
Tstg	Storage Temperature		-40 to +125	℃
Mt	Mounting Torque	To terminals(M4)	25%	Nm
Mt		To terminals(M6)	5±5%	Nm
Ms		To heatsink(M6)	5±5%	Nm
di/dt	Critical Rate of Rise of On-State Current	$T_{VJ}=T_{VJM}$, $V_D=1/2V_{DRM}$,I_G =100mA d_{iG}/d_t=0.1A/μs	200	A/μs
dv/dt	Critical Rate of Rise of O -State Voltage, min.	$T_J=T_{VJM}$,$V_D=2/3V_{DRM}$,linear voltage rise	500	V/μs

Electrical and Thermal Characteristics

Symbol	Item	Conditions	Values			Units
			Min.	Typ.	Max.	
V_{TM}	Peak On-State Voltage, max.	T=25℃ I_T=200A		1.35	V	
I_{RRM}/I_{DRM}	Repetitive Peak Reverse Current, max. / Repetitive Peak O -State Current, max.	$T_{VJ}=T_{VJM}$,$V_R=V_{RRM}$,$V_D=V_{DRM}$		100	mA	
V_{GT}	Gate Trigger Voltage, max.	T_{VJ} =25℃ , V_D =6V		3	V	
I_{GT}	Gate Trigger Current, max.	T_{VJ} =25℃ , V_D =6V		150	mA	
Rth(j-c)	Thermal Impedance, max.	Junction to Case			0.14	℃/W
Rth(c-s)	Thermal Impedance, max.	Case to Heatsink			0.06	℃/W

SHI LING

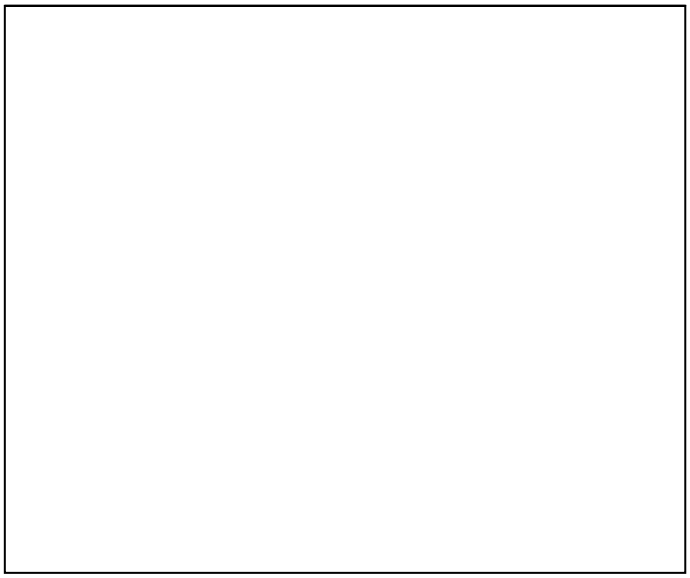

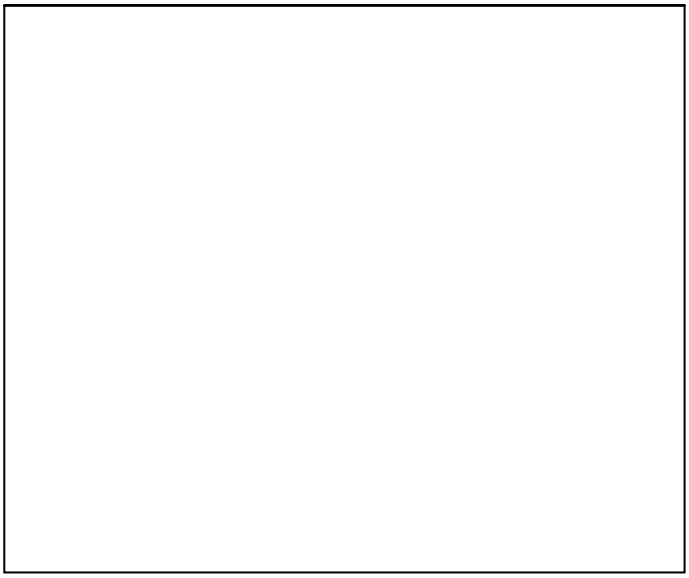

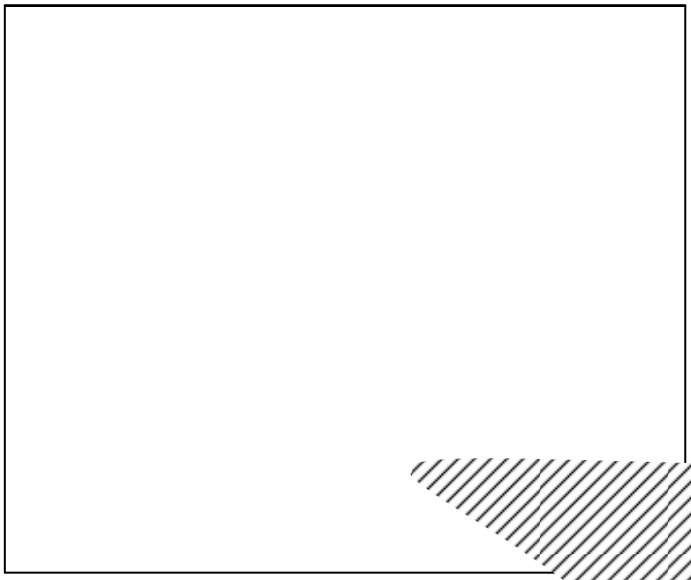

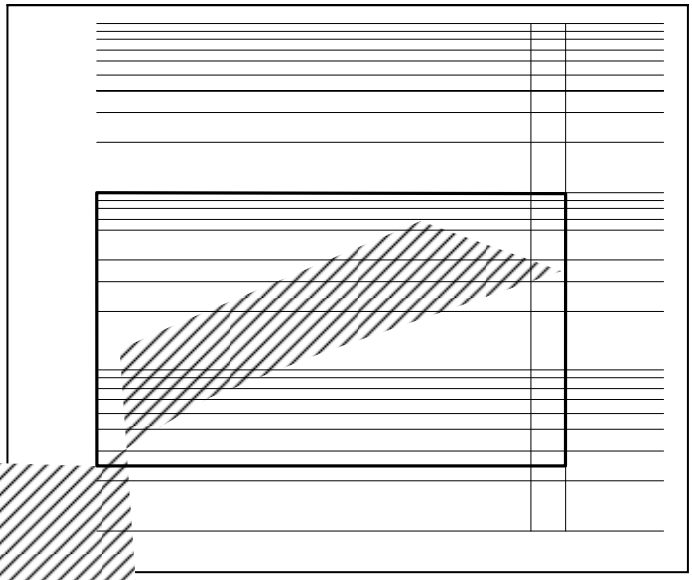

TD Ⅱ TD Ⅱ)

Package Outline Information

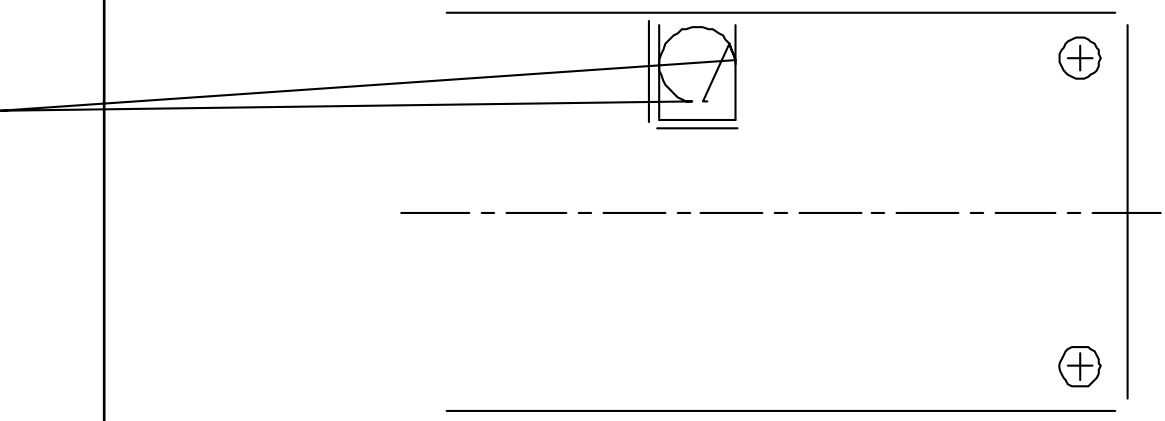

Dimensions in mm

