⅌ ⅃ Ǝ

Specifcation of products

MURP100100CI

Ⅸ ʿ x ˜ ھ
ZHEJIANG SHILING SEMICONDUCTOR CO.,LTD.

Ж ʁ ˡ
Ж Є 0578 S 3615066
Ж 323000
E-mail:smrshiling12@163.com
Http//www.smrshiling.com

⅃		8
	ʼ ₩	▫

ᗡ Ж 02 Ж 2026.5

Ultra Fast Soft Recovery Diode Module

Description

Ultra FRD module devices are optimized to reduce losses and EMI/RFI in high frequency power conditioning electrical systems. These diode modules are ideally suited for power converters, motors drives and other applications where switching losses are significant portion of the total losses.

Features

☞ Repetitive Reverse V

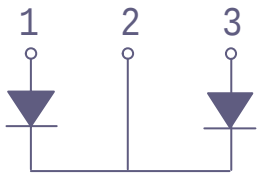

Thermal Characteristics

Symbol	Parameter	Conditions	Values			Unit
			Min%	Typ%	Max%	
$R_{th\$j\ c\&}$	Thermal Resistance	Junction to Case			#%"#	℃3W

Electrical Characteristics (T_j!)*℃$unlessotherwise specified&

Symbol	Parameter	Conditions		Values			Unit
				Min%	Typ%	Max%	
V_R	Cathode Anode Breakdown Voltage	I_R! "##uA		"##			V
V_{FM}	Maximum Forward Voltage	I_{FM}! -##A. T_c!)*℃			"%#	"%"	V
		I_{FM}! -##A. T_c !"##℃			#%4	#%,	V
I_{RRM}	Repetitive Peak Reverse Current	T_C! "##℃ . V_{RRM} applied				"#%#	mA
t_{rr}	Reverse RecoveryTime	I_{FM}! "##A. V_R! "*#V di3dt! "00A3us	T_c!)*℃		5*	4#	ns
			T_c! "##℃		"##		ns

Package Outlines

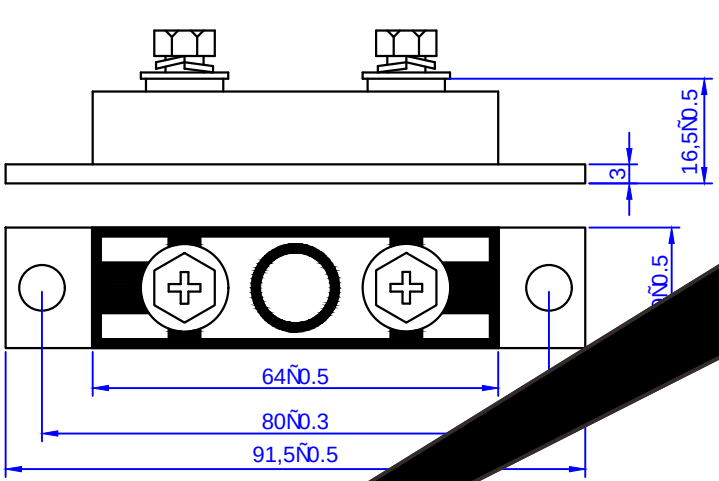

Unit:mm

Performance Curves

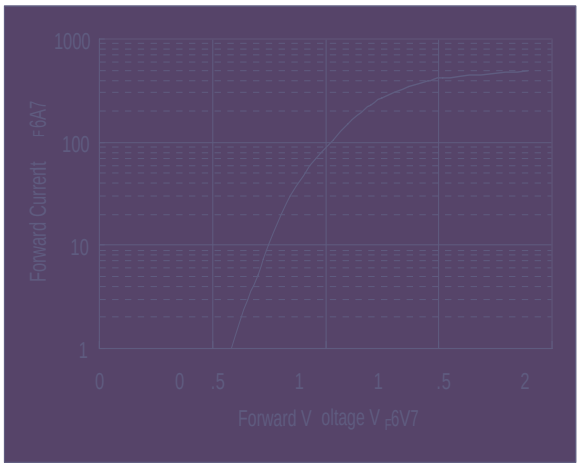

Fig% " ' Typical Forward Voltage Drop vs% Instantaneous Forward Current



Fig%) ' Typical Reverse Recovery Time vs% di3dt