Specifcation of products

:

:MBK600U1K2

ZHEJIANG SHILING SEMICONDUCTOR CO.,LTD.

0578 3615066
323000
E-mail:smrshiling12@163.com
Http//www.smrshiling.com

01 2026.3

PRODUCT FEATURES

- Ultrafast Reverse Recovery Time
- Soft Reverse Recovery Characteristics
- Low Reverse Recovery Loss
- Low Forward Voltage
- High Surge Current Capability
- Low Inductance Package

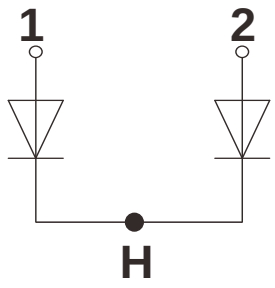

APPLICATIONS

- Inversion Welder
- Uninterruptible Power Supply
- Plating Power Supply
- Ultrasonic Cleaner and Welder
- Converter & Chopper
- Power Factor Correction (PFC) Circuit

ABSOLUTE MAXIMUM RATINGS

T_C=25℃ unless otherwise specified

Symbol	Parameter	Test Conditions	Values	Unit
V_R	Maximum D.C. Reverse Voltage		100	V
V_{RRM}	Maximum Repetitive Reverse Voltage		100	V
$I_{F(AV)}$	Average Forward Current	T_C=110℃, Per Diode	300	A
		T_C=110℃, Per Moudle	600	A
$I_{F(RMS)}$	RMS Forward Current	T_C=110℃, Per Diode	360	A
I_{FSM}	Non-Repetitive Surge Forward Current	T_J=45℃, t=10ms, 50Hz, Sine	3000	A
		T_J=45℃, t=8.3ms, 60Hz, Sine	3200	A
I^2t	I^2t (For Fusing)	T_J=45℃, t=10ms, 50Hz, Sine	44600	A^2s
		T_J=45℃, t=8.3ms, 60Hz, Sine	45000	A^2s
P_D	Power Dissipation		694	W
T_J	Junction Temperature		-40 to +150	℃
T_{STG}	Storage Temperature Range		-40 to +125	℃
Torque	Module-to-Sink	Recommended（M6）	3～5.0	N.m
Torque	Module Electrodes	Recommended（M6）	3～5.0	N.m
$R_{\theta JC}$	Thermal Resistance	Junction-to-Case, Per Diode	0.18	℃ /W
Weight			92	g

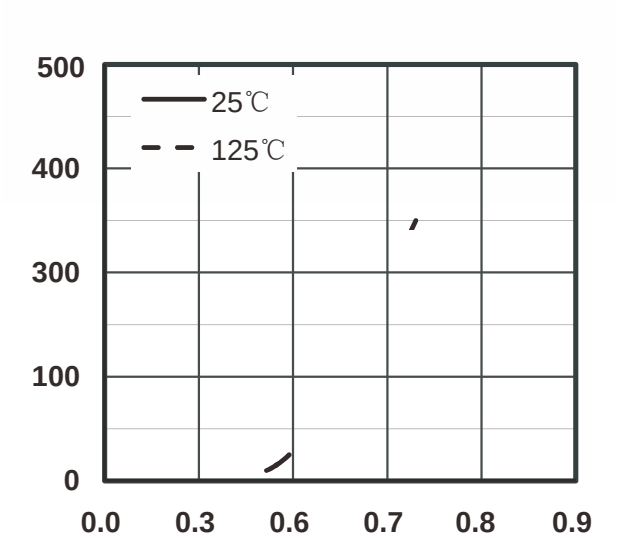

Figure 1. Forward Voltage Drop vs Forward Current

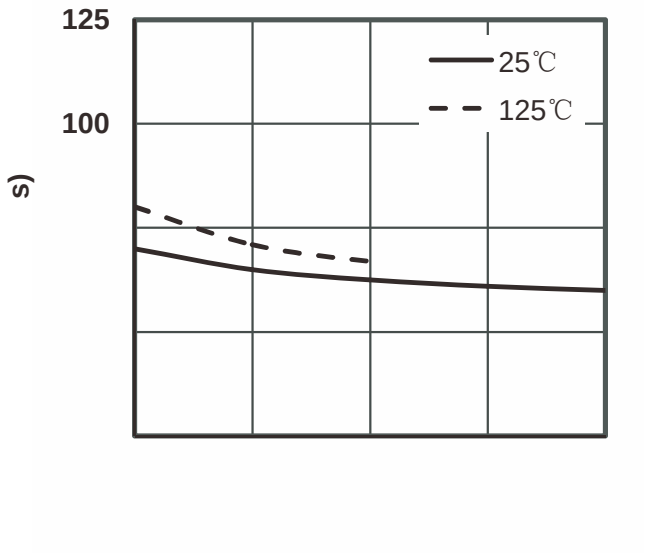

Figure 2. Reverse Recovery Time vs dI/dt

SHI LING ®

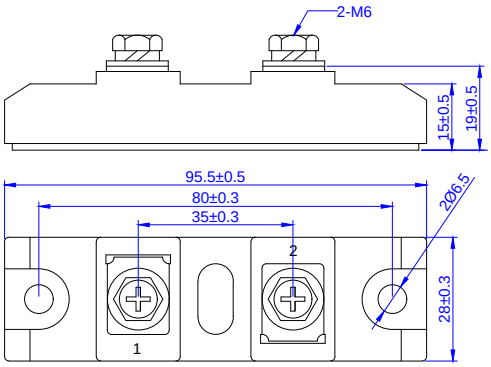

K2(B)

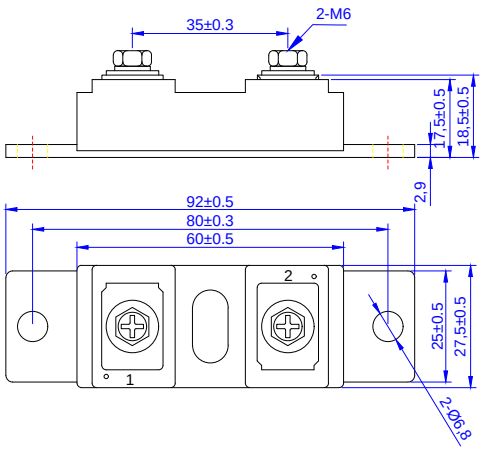

K2